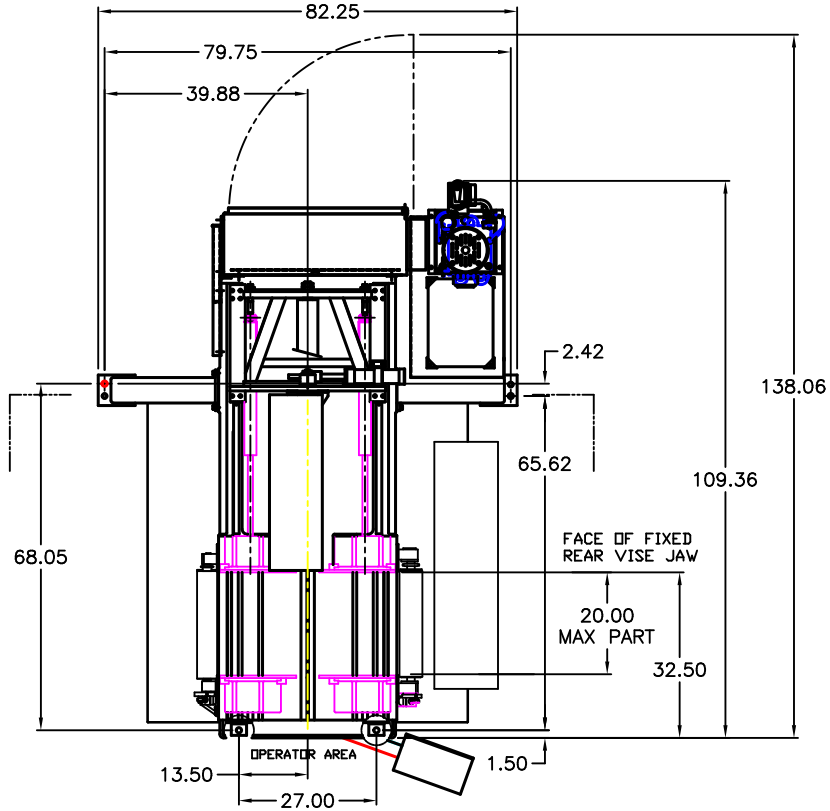

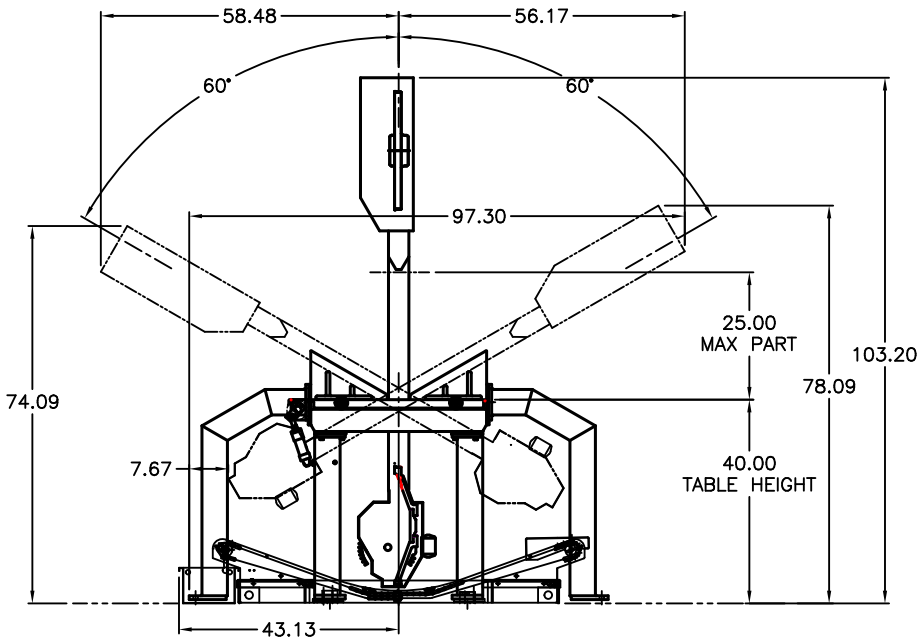

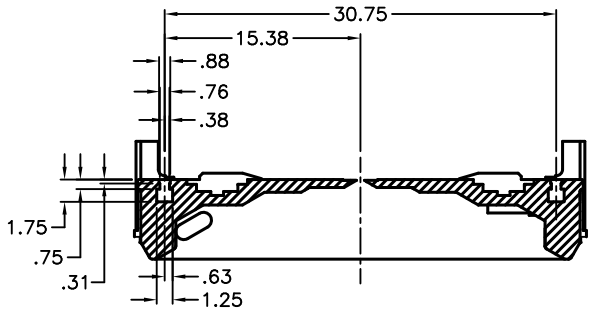

TABLE CROSS SECTION
SCALE 1:4